Aftermarket 30A Install
Manual Transfer – Inverter Only

This is a diagram of a typical aftermarket installation in a RV or Marine application with a 30 Amp shore power cord and *NO TRANSFER SWITCH* . Inverter output is provided by 30A outlet wired directly to the output of the inverter. All transfer operations from shore or generator is strictly manual.

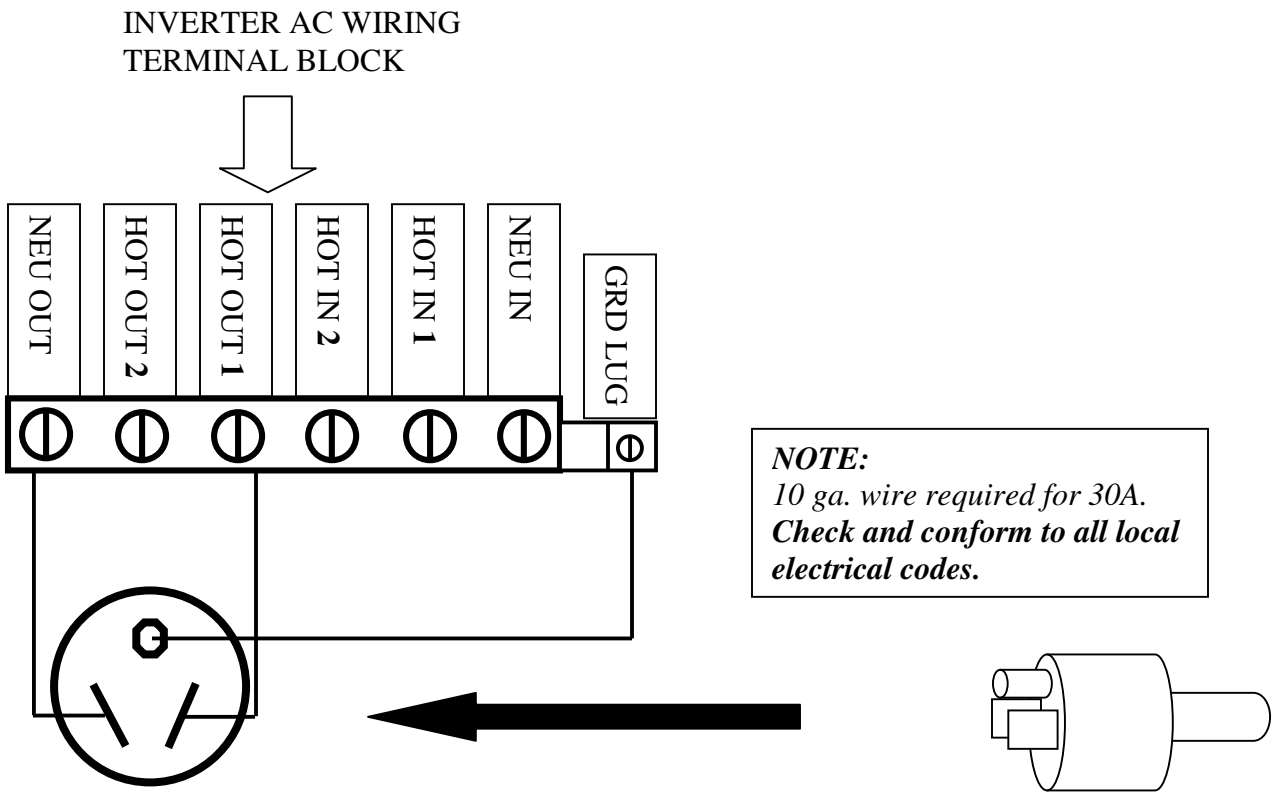

NOTE:
10 ga. wire required for 30A.
Check and conform to all local electrical codes.

30 Amp Outlet Wired directly to the output of the inverter

Plug Shore Power Cord directly into 30 Amp Outlet to provide ac power directly to ac panel

30 Amp Shore Power Cord

NOTE: the inverter can now power all AC circuits. Be sure to turn off all unwanted circuits including a/c, water heater, refer and diesel block heater.
WARNING: *Disable existing converter/battery charger when on inverter power or dead batteries will result.*

Aftermarket 30A Install
Manual Transfer – Inverter and Charger

This is a diagram of a typical aftermarket installation in a RV or Marine application with a 30 Amp shore power cord and *NO TRANSFER SWITCH.* Inverter output is provided by 30A outlet wired directly to the output of the inverter. A separate ac power cord provides charger input. All transfer operations from shore or generator is strictly manual.

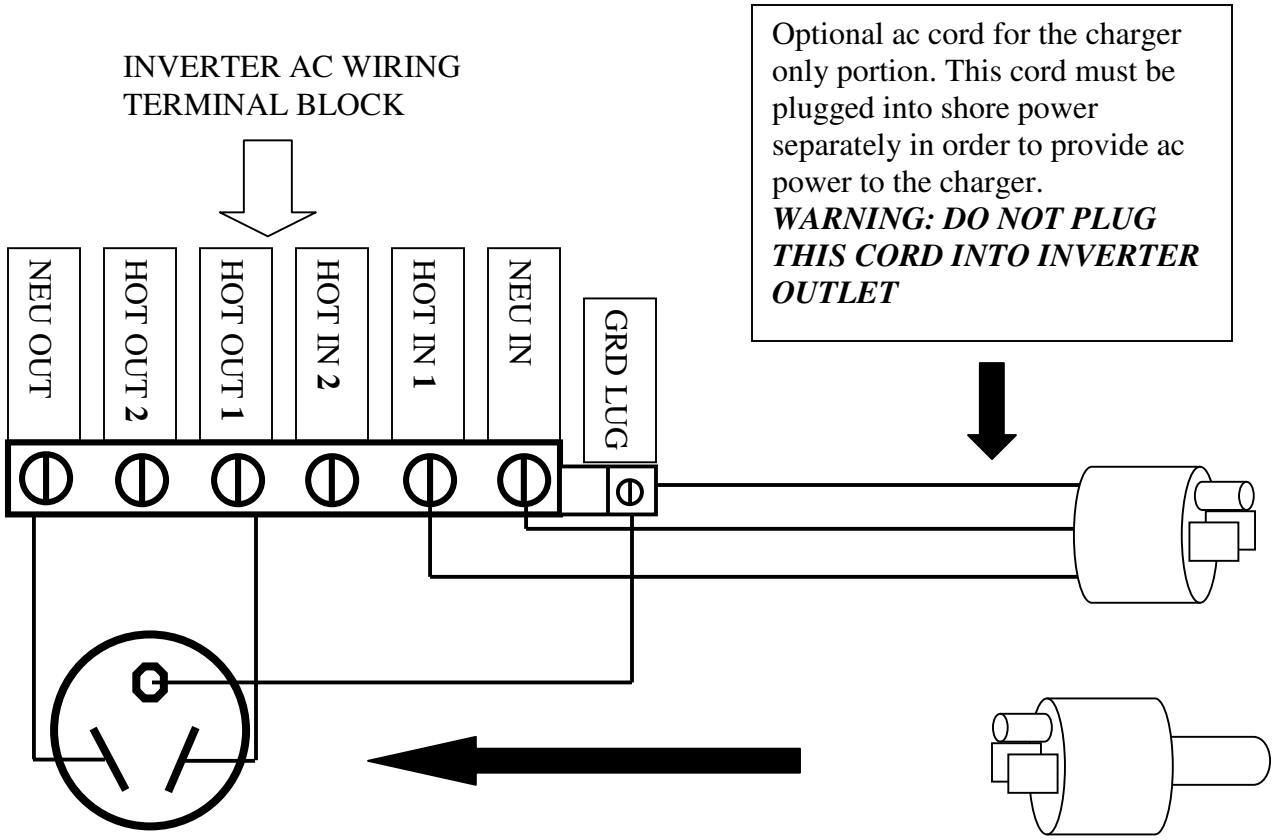

30 Amp Outlet Wired directly to the output of the inverter

Plug Shore Power Cord directly into 30 Amp Outlet to provide ac power directly to ac panel

30 Amp Shore Power Cord

NOTE:
10 ga. wire required for 30A.
Check and conform to all local electrical codes.

NOTE: the inverter can now power all AC circuits. Be sure to turn off all unwanted circuits including a/c, water heater, refer and diesel block heater.
WARNING: *Disable existing converter/battery charger when on inverter power or dead batteries will result.*

Aftermarket 30A Install

This is a diagram of a typical aftermarket installation in a RV or Marine application with a 30 Amp shore power cord *WITH TRANSFER SWITCH*. The existing transfer switch achieves switching between shore and generator automatically. The internal transfer switch inside the inverter achieves switching between inverter power and shore or generator automatically.

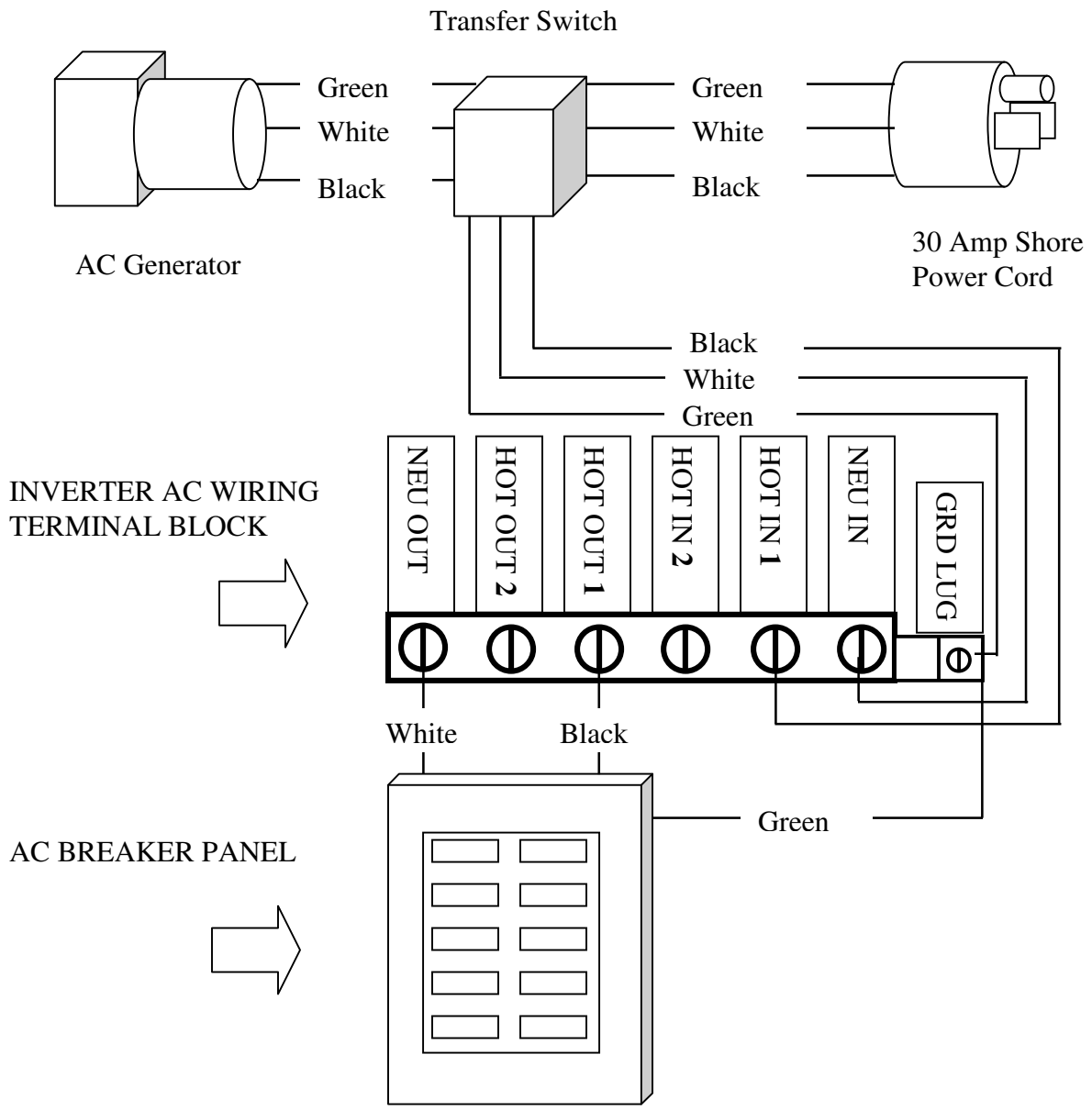

NOTE: the inverter can now power all AC circuits. Be sure to turn off all unwanted circuits including a/c, water heater, refer and diesel block heater.
WARNING: *Disable existing converter/battery charger or dead batteries will result.*